with follower

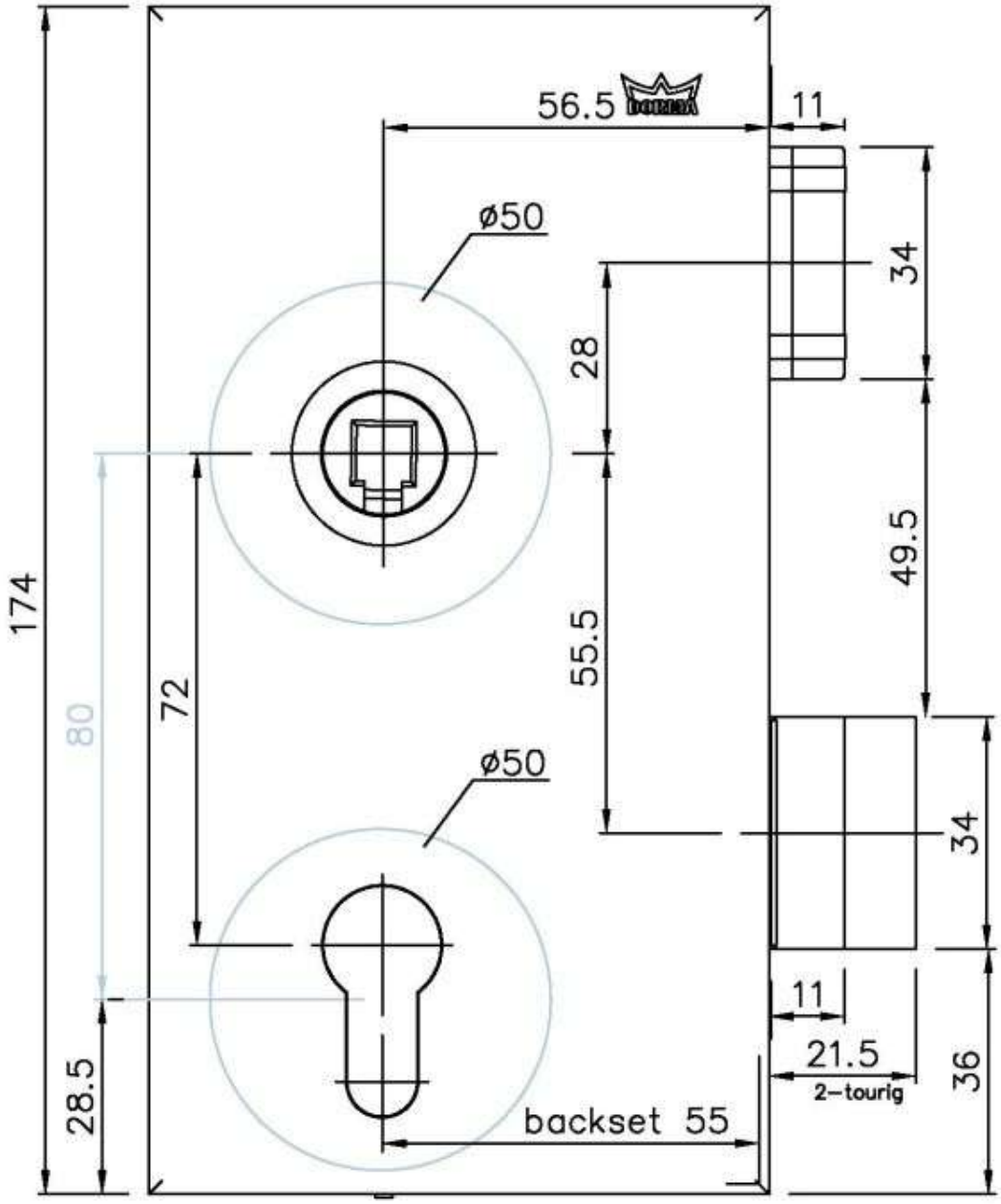
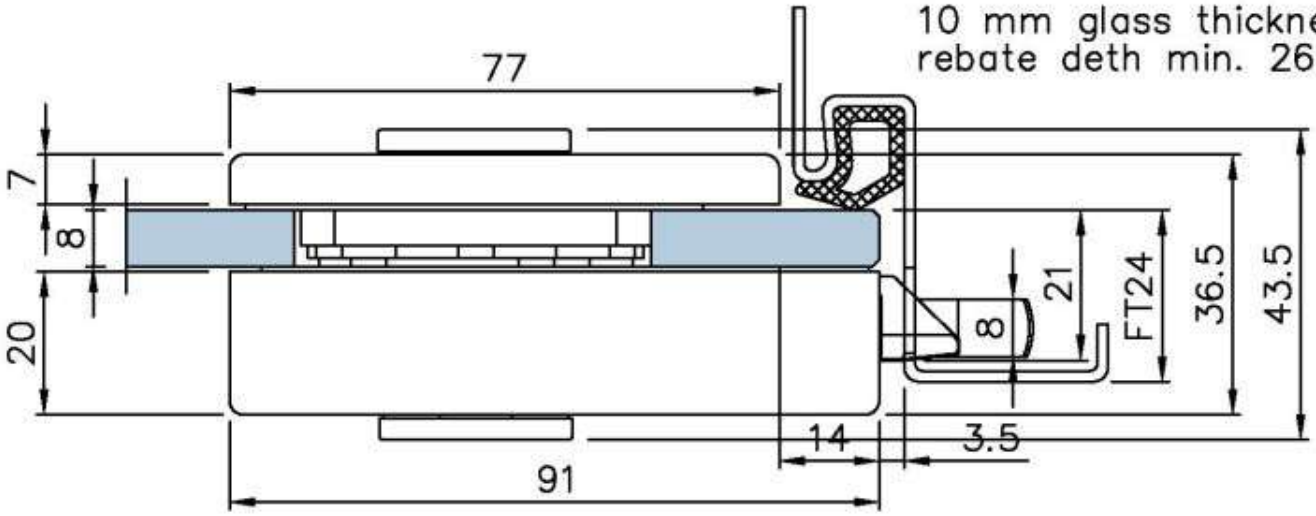
10 mm glass thickness
rebate deth min. 26-28mm